Parts List			
ITEM	QTY	PART NUMBER	DESCRIPTION
1	1	CM-11493-BP	.250 BACK PLATE
2	1	CM-11493-G	SQ. TUBE 1.50 x .188" GUSSET
3	1	CM-RT4.5-2	4.50" JEMS STYLE RECEIVER TUBE
4	1	CM-CL3	5/16" DIA. SAFETY CHAIN LOOP
5	1	CM-11483-MP	.250" MOUNTING PLATE

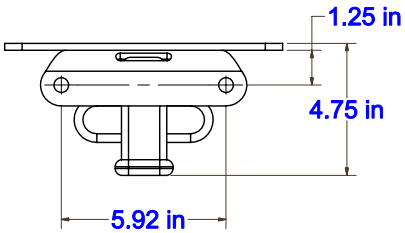

NOTES:
MERGE WELDS ALL AROUND
TOTAL WELD INCHES = 33.25"

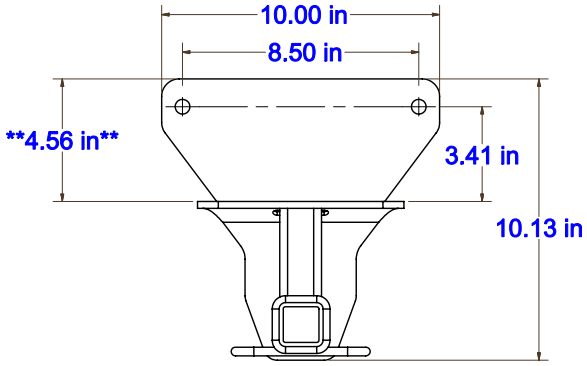

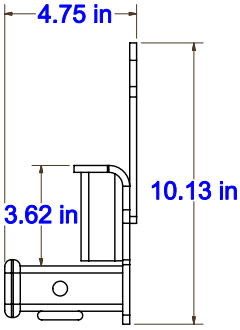

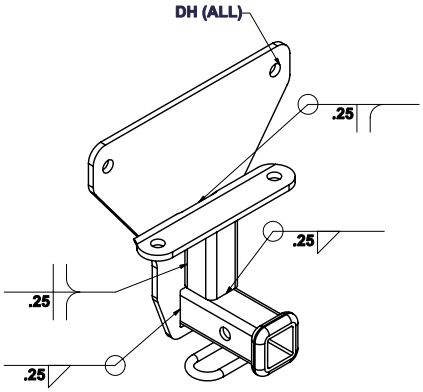

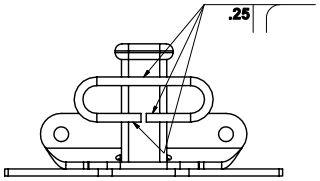

HITCH INSTALLATION CODE
DH = *DRILL HOLE* IN FRAME FOR HITCH INSTALLATION.
EH = *EXISTING HOLE* IN FRAME FOR HITCH INSTALLATION.
EW = *EXISTING WELDNUT* IN FRAME FOR HITCH INSTALLATION.

WELD ALL AROUND PART	
TYP	WELD SIMILAR PARTS THE SAME
WELD OUT	WELD ALL EDGES AND/OR SURFACES

FILLET WELD	
FLANGE CORNER WELD	
SQUARE GROOVE WELD	

STANDARD TOLERANCES
.XX +/-.06
.XXX +/-.03
X° +/-1°
ALL DIMENSIONS SHOWN ARE FOR REFERENCE ONLY.

DRAWN KWS 5/16/2006
CHECKED

Manufacturing CURT INCORPORATED
6208 Industrial Drive
Eau Claire, WI 54701

TITLE
RECEIVER HITCH WELDMENT

SIZE C | DWG NO CM-11493-WA | REV
SCALE | SHEET 1 OF 1